TURBO™ 35+

PORTABLE MAGNETIC DRILLING MACHINE

PARTS AND WIRING MANUAL

JEI Solutions
Built for Industry



Spare Parts

Exploded Diagrams

Wiring Diagrams

JEI SOLUTIONS
UNIT 21
EMPIRE BUSINESS PARK,
ENTERPRISE WAY,
BURNLEY,
LANCASHIRE,
BB12 6LT

+44 1706 229490

sales@jeisolutions.co.uk

www.jeiuk.com

V.1 SEPTEMBER 2026

ABOUT THIS MANUAL

This Technical Service Manual contains exploded parts diagrams, spare parts information, and electrical wiring diagrams for the JEI T35+ Portable Magnetic Drilling Machine. It is intended for use by qualified service personnel and authorised repair centres. For operating instructions and safety guidance, please refer to the T35+ Operator's Manual.

TABLE OF CONTENTS

PAGE

1 MACHINE OVERVIEW..... 2
2 WIRING DIAGRAM..... 3
3 EXPLODED MACHINE DIAGRAM..... 4
4 MACHINE PARTS LIST..... 5
5 EXPLODED MOTOR DIAGRAM..... 6
6 MOTOR PARTS LIST..... 7
7 KEEP YOUR T35+ PERFORMING AT ITS BEST..... 8
8 GENERAL MAINTENANCE NOTES..... 8

1 T35+ MACHINE OVERVIEW

NO.	DESCRIPTION
1	MAGNET BASE
2	MAIN BODY CASTING
3	CABLE GLAND FOR MAINS CABLE
4	MAGNET SWITCH
5	ON/OFF SWITCH
6	FEED HANDLE
7	ANCHOR POINT
8	PROTECTIVE CABLE CONDUIT
9	CARRY HANDLE
10	HEIGHT ADJUSTMENT LOCK
11	SLIDE RAIL
12	MOTOR
13	MOTOR HOUSING/CAP
14	GUARD
15	COOLANT RING
16	ARBOR
17	ANNULAR CUTTER
18	SAFETY STRAP ANCHOR POINT

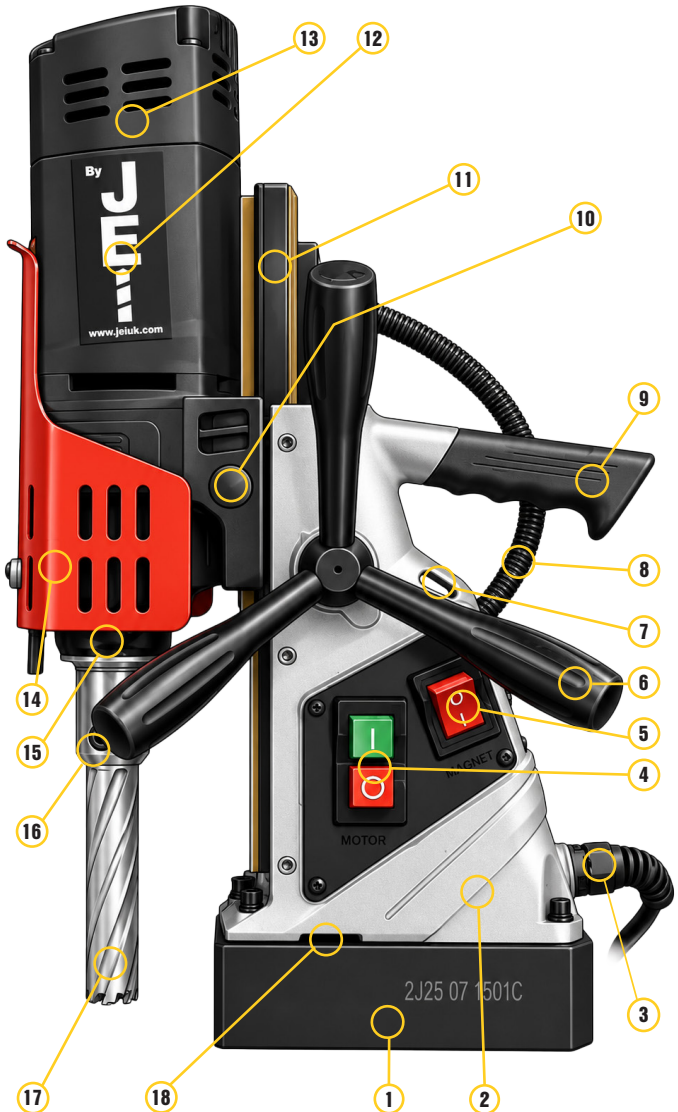

2 T35+ WIRING DIAGRAM

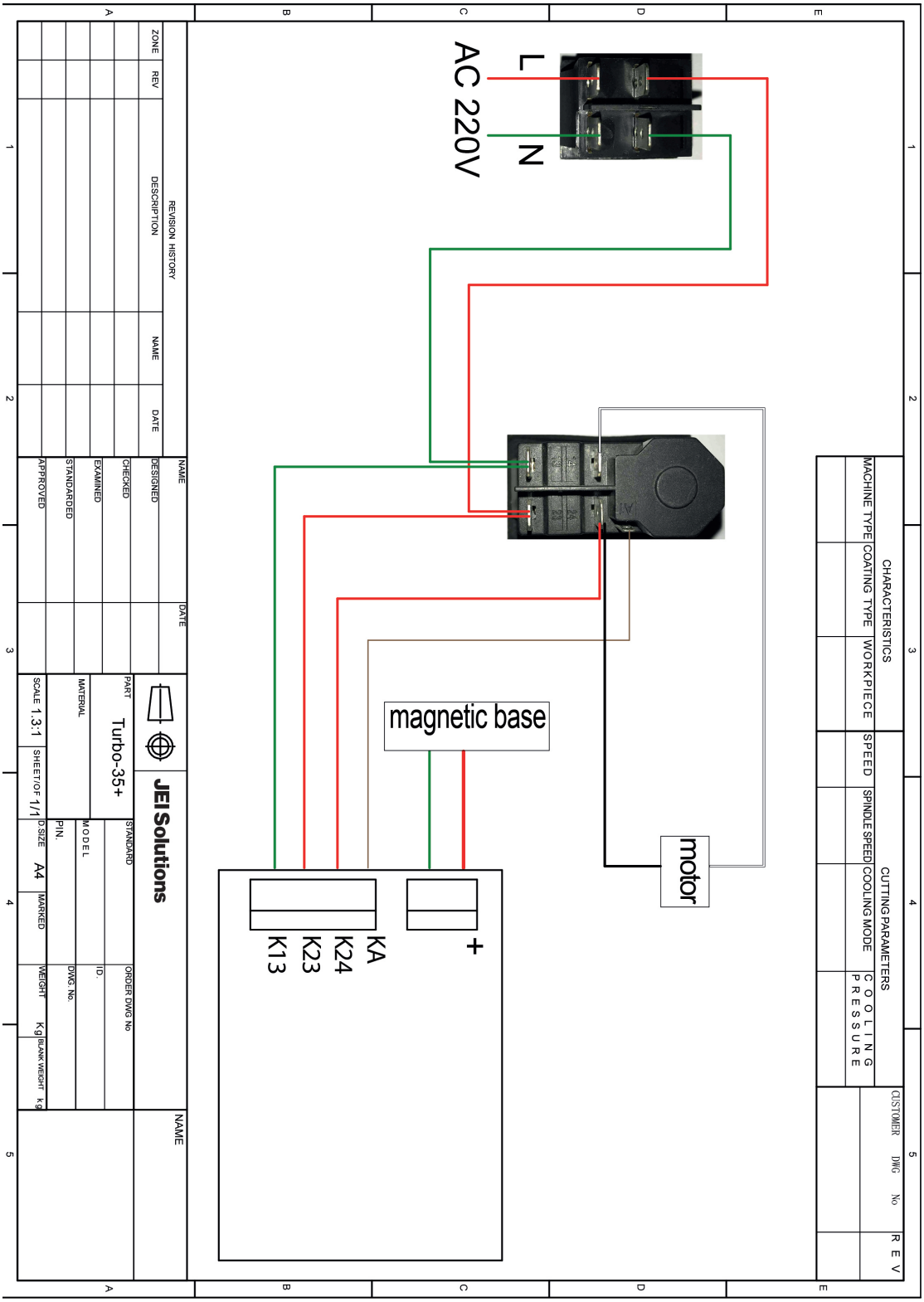

3 T35+ EXPLODED MACHINE DIAGRAM

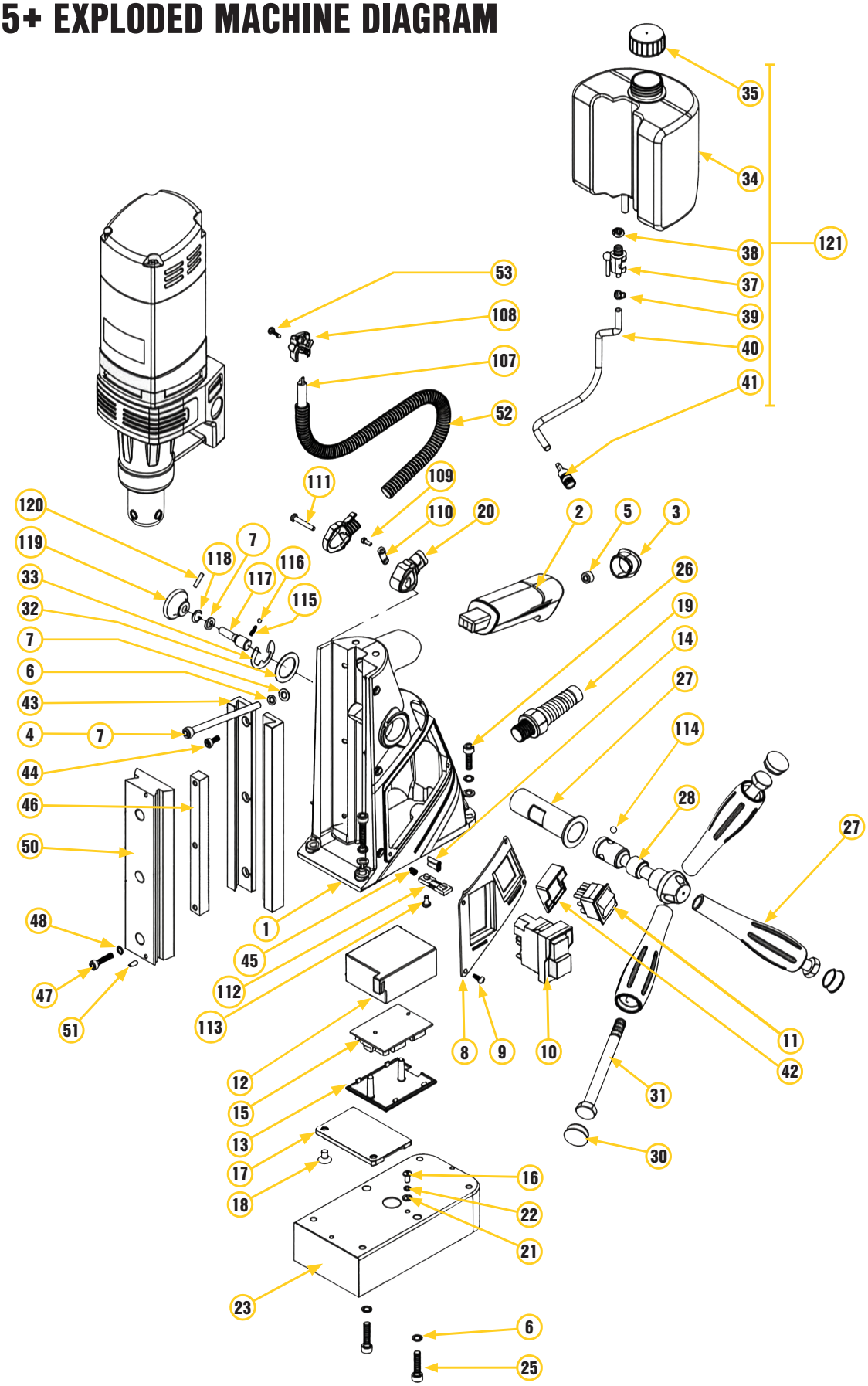

4 T35+ MACHINE PARTS LIST

No.	Description	Part Number	Size	Qty
1	Frame	T35-2303019		1
2	Handle	T35-2303027	31×37×112	1
3	Handle cap	T35-2303028	19×25×11	1
4	Hexagon socket head cap screws	T35-2303042	M6×90	1
5	Hexagon lock nut	T35-2102062	M6	1
6	Spring washer	T35-2103010	6	7
7	Gasket	T35-2103011	6	6
8	Button panel	T35-2303035	110×75×7	1
9	Hexagon flat & round head screw	T35-2102056	M4×10	4
10	Motor On / Off	22709.3-110V		1
11	Magnet Switch	T35-2608020		1
12	Circuit board box	T35-2303056	66×52×30.5	1
13	Circuit board cover	T35-2303057	66×52×24	1
14	Hexagon head screw	T35-2102055	M3×15	2
15	PCB	T35-2204012	60x48 220V	1
16	Self-tapping screw	T35-2102188	M4×8	2
17	Sealed plate	T35-2303037	76×50×5	1
18	Hexagon head screw	T35-2102063	M6×10	2
19	Cable gland	T35-2202019	MA16-P-10	1
20	Elbow connector	T35-2202020	43×30×22 AD13	1
21	Serrated washer	T35-2103016	4	2
22	Spring washer	T35-2103006	4	2
24	Magnetic base	T35-2303259	167×84×44 220V	1
25	Hexagon round head screws	T35-2102066	M6×25	4
26	Hexagon round head screws	T35-2102265	M6×20	2
27	Sealed sleeve for feed shaft	T35-2303036	Ø20×Ø23×73	1
28	Pinion gear shaft	T35-2303004	Ø31.5×104z15m1	1
29	Feed handle	T35-2303029	Ø10×Ø30×120	3
30	Feed handle cap	T35-2303030	Ø20×9	3
31	Hexagon head bolt	T35-2102054	M10×110	3
32	Flat washer	T35-2303014	Ø21×Ø32×1	1
33	Open ring	T35-2601028	Ø15×Ø29.5×1.5	1
34	Coolant bottle	T35-2303031	600 ml	1
35	Coolant bottle Cap	T35-2303032	Ø33×15.5	1
37	Valve fittings	T35-2399031	Ø15.5×37-90	1
38	Hexagon thin nuts	T35-2611208	M8×1	1
39	Steel belt type elastic hoop	T35-2199013	Ø6	1
40	PU tube	T35-2499001	Ø6×Ø4	0.3
41	Water nozzle	T35-2611207	Ø4	1
42	Switch shroud	T35-2303202	37×30.5×12	1
43	Slide rail	T35-2303010	208×22×15.5	2
44	Hexagon round head screws	T35-2102191	M5×10	6
45	Hexagon flat end tight screws	T35-2102061	M5×8	3
46	Gear rack	T35-2303427	152×12×12 m1	1
47	Hexagon screw	T35-2102060	M5×15	3
48	Spring washer	T35-2103008	5	3
50	Slide	T35-2303011	190×49×21	3
51	Hexagon flat end tight screws	T35-2102057	M4×10	2
52	Protective cable conduit	T35-2603018	Ø3	0.4
53	Cross recessed pan head tapping	T35-2102233	ST3.5×16	2
107	Two-core power cable	T35-2202065	220V 10A 1mm²	0.65
108	Wire cover	T35-2303443	27×23×12.3	1
109	Wire cover	T35-2102134	ST2.9×10	2
110	Cable clamp	T35-2102215	026-1	1
111	Hexagon socket head cap screws	T35-2102227	M4×25	2
112	Tension disc	T35-2202061	026-2F	1
113	Hexagon socket head cap screws	T35-2102228	M4×12	3
114	Round steel ball	T35-2105003	Ø6	3
115	Cylindrical compression spring	T35-2106068	Ø3.8×Ø0.6×10	1
116	Round steel ball	T35-2105004	Ø4	1
117	Locking clutch shaft	T35-2303408	Ø10.4×35	1
118	Circlip for hole	T35-2101078	Ø12	1
119	Locking device	T35-2303407	Ø 30×13.5	1
120	Elastic cylindrical pin	T35-2101061	Ø 3.5×14	1
121	Water bottle assembly	T35-2303041	Parts 34-41	1

WHEN ORDERING SPARE PARTS

TO HELP US IDENTIFY THE CORRECT COMPONENT, PLEASE HAVE:

MACHINE MODEL

MACHINE SERIAL NUMBER

PART NO. / DIAGRAM REFERENCE

№

MACHINE VOLTAGE: 110V OR 220V

NOT SURE WHICH PART YOU NEED? SEND US A PHOTO AND WE'LL HELP IDENTIFY IT.

NEED HELP WITH SPARE PARTS?

FOR SUPPORT WITH SPARES, REPAIRS, AND GENERAL TECHNICAL HELP CONTACT US

TEL: 01706 229490
EMAIL: SALES@JEISOLUTIONS.CO.UK

5 EXPLODED MOTOR DIAGRAM

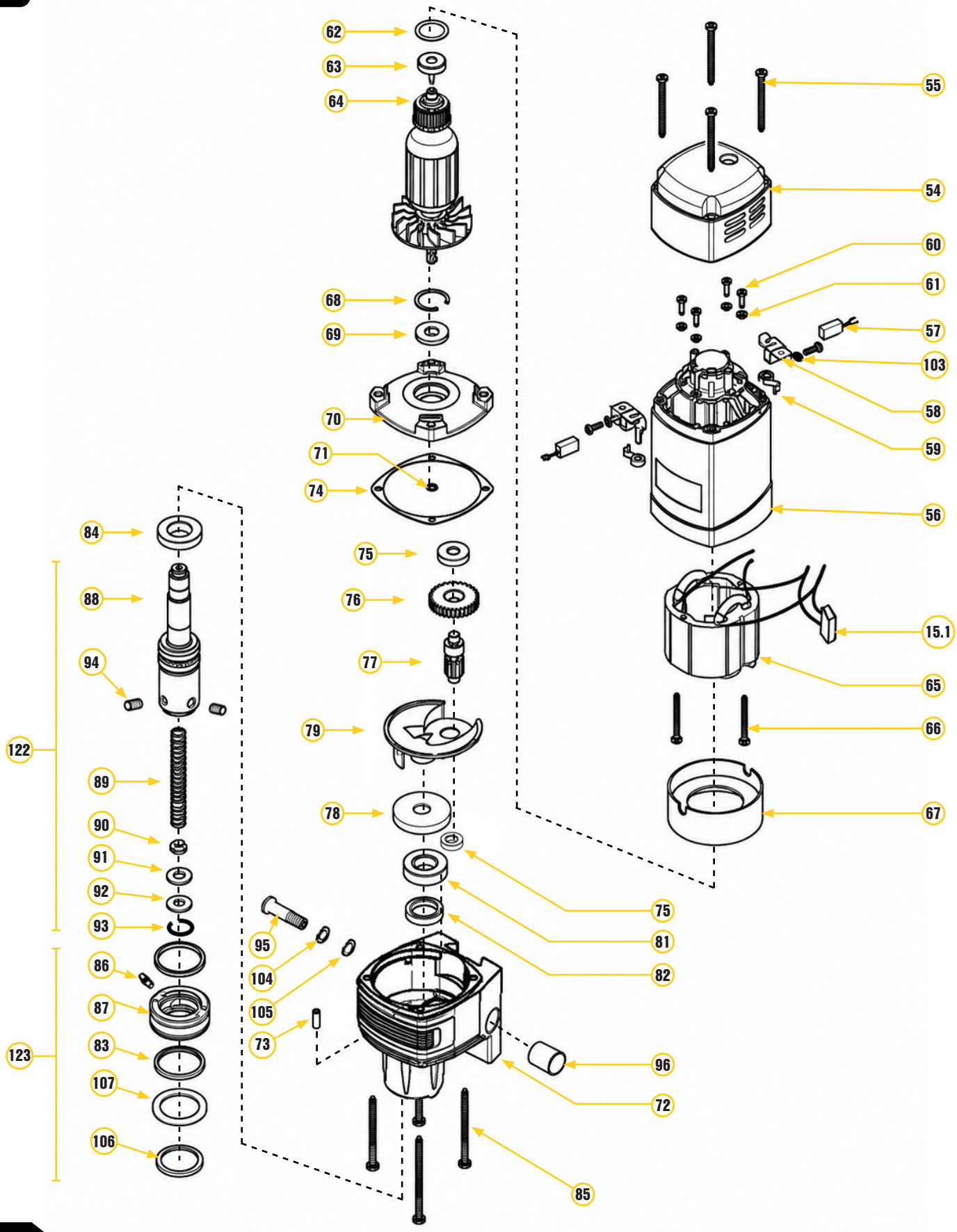

6 T35+ MOTOR PARTS LIST

No.	Description	Part Number	Size	Qty
15.1	Electronic components fuse	T35-2611098	275V 0.1uf	1
54	Motor cap	T35-2303024		1
55	Screw	T35-2102070	ST4.8×50	4
56	Motor shell	T35-2303025		1
57	Carbon brush	T35-2299003	18×6.2×9.9 220V	2
58	Carbon brush base	T35-2299004	18×6.2×9.9	2
59	Flat spiral spring	T35-2299005	5×0.3	2
60	Screw	T35-2102058	M4×12	6
61	Elastic washer	T35-2103007	4	6
62	O-ring	T35-2104034	Ø22×Ø2.5	1
63	Deep groove ball bearing	SKF-6082RSH	608 ZZ	1
64	Armature	T35-2299001	220V	1
65	Field coil	T35-2299002	220V	1
66	Screw	T35-2102069	ST3.9×62	2
67	Baffle	T35-2303026	Ø75.5×Ø45×30	1
68	Hole circlip	T35-2601282	Ø28	1
69	Deep groove ball bearing	04543	6001-2RS	1
70	Gear box cover	T35-2303021		1
71	Shaft circlip	T35-2103014	Ø10	1
72	Gear box	T35-2303020		1
73	Cylindrical Pin	T35-2101034	Ø4×12	1
74	Paper gasket seal	T35-2303016	Ø78×0.5	1
75	Deep groove ball bearing	T35-2105006	608	2
76	Helical gear	T35-2303001	Z40m1.25h10	1
77	Gear shaft	T35-2303002	Z8m1.25L49	1
78	Straight gear	T35-2303003	Z40m1.25h10	1
79	Oil Guide	T35-2303023	Ø78×22.6	1
81	Deep groove ball bearing	T35-2105007	6003-2RS	1
82	Skeleton ring	T35-2611118	Ø20×Ø28×4	1
83	Y-ring (NOTE: Wear part)	T35-2104040	Ø34×Ø42×3.7	2
84	Deep groove ball bearing	T35-2105008	61904-2RS	1
85	Screw	T35-2102071	ST4.8×90	4
86	Brass nozzle	T35-2301504	M6×16-Ø2	1
87	Cooling ring	T35-2303007	Ø49×20	1
88	Outer shaft	T35-2303008	Ø34.5×Ø19.05×136	1
89	Ejection spring	T35-2106056	Ø11.5×Ø1.2×21	1
90	Bulkhead	T35-2303009	Ø11.5×8	1
91	Parallel sealing ring	T35-2101044	Ø19×Ø10×3.7	1
92	Spacer	T35-2301020	Ø19×11×1.7	1
93	Hole circlip	T35-2101001	Ø19×1	1
94	Hexagon socket set screw (12.9 grade)	T35-2102030	M8×8	2
95	Hexagon socket head cap screw	T35-2102067	M8×50	1
96	Clamping block	T35-2303012	Ø20×28	1
103	External-tooth serrated lock washer	T35-2103016	4	2
104	Gasket	T35-2103012	8	1
105	Spring washer	T35-2103013	8	1
106	Gear rack	T35-2611220	34	1
107	Flat washer	T35-2303018	Ø33.5×Ø45×1	1
122	Drill spindle assembly	T35-2303017		1
123	Coolant feed ring assembly	T35-2303046		1

WHEN ORDERING SPARE PARTS

TO HELP US IDENTIFY THE CORRECT COMPONENT, PLEASE HAVE:

MACHINE MODEL

MACHINE SERIAL NUMBER

PART NO. / DIAGRAM REFERENCE

№

MACHINE VOLTAGE: 110V OR 220V

NOT SURE WHICH PART YOU NEED? SEND US A PHOTO AND WE'LL HELP IDENTIFY IT.

NEED HELP WITH SPARE PARTS?

FOR SUPPORT WITH SPARES, REPAIRS, AND GENERAL TECHNICAL HELP CONTACT US

TEL: 01706 229490
EMAIL: SALES@JEISOLUTIONS.CO.UK



7 KEEP YOUR T35+ PERFORMING AT ITS BEST

Regular maintenance will ensure the safety, reliability, and long service life of your machine. Use the service interval chart below as a guide to keep your **T35+** in optimum condition.

TASK	DAILY	WEEKLY	MONTHLY
CLEAN SWARF	✓		
LUBRICATE SLIDE		✓	
INSPECT BRUSHES			✓
CHECK MAGNET		✓	
INSPECT CABLE		✓	

8 GENERAL MAINTENANCE NOTES

- ☑ Always unplug the machine before cleaning, inspecting, or performing maintenance.
- ☑ Remove swarf and debris after each use.
- ☑ Keep slide rails clean and lightly lubricated.
- ☑ Inspect power cable and plug for damage before each use.
- ☑ Ensure magnet base is clean and free from debris for maximum holding power.
- ☑ Check coolant bottle level and refill as required.
- ☑ Store machine in a clean, dry environment when not in use.

IMPORTANT

Always disconnect the machine from the power supply before carrying out any maintenance or repair work. Use only genuine JEI replacement parts to ensure safety, performance, and reliability.

NEED SPARE PARTS OR SUPPORT

Our team can assist with spare parts, technical support, and service enquiries.

+44 1706 229490

sales@jeisolutions.co.uk

www.jeiuk.com