TURBO 35+

PORTABLE MAGNETIC DRILLING MACHINE

OPERATOR'S MANUAL

JEI Solutions
Built for Industry



MAX 35 MM Ø

150 MM DOC

13 MM MAX Ø

ONLY 9.5 KG

1100 W MOTOR

CE

bsi ISO 9001 Quality Management Systems CERTIFIED
FM 37982

JEI SOLUTIONS
UNIT 21
EMPIRE BUSINESS PARK,
ENTERPRISE WAY,
BURNLEY,
LANCASHIRE,
BB12 6LT

+44 1706 229490

sales@jeisolutions.co.uk

www.jeiuk.com

V.1 AUGUST 2026

BEFORE YOU START WORK WITH THE MACHINE, PLEASE READ THESE INSTRUCTIONS CAREFULLY AND FOLLOW ALL RECOMMENDATIONS.

TABLE OF CONTENTS PAGE

1 SPECIFICATIONS..... 2
2 THE T35+ AT A GLANCE..... 3
3 SAFETY PRECAUTIONS..... 4
4 GENERAL SAFETY RULES..... 4
5 WHAT'S INCLUDED..... 5
6 PRE-USE CHECKLIST..... 5
7 READY TO DRILL..... 6
8 MAKING THE CUT..... 7
9 CORRECT CUTTER USAGE..... 7
10 KEEP YOUR T35+ PERFORMING AT ITS BEST..... 8
11 EC CONFORMITY..... 8
12 WARRANTY..... 8

WARNING!

Before you start working with the machine, please read these instructions carefully. Take special note of the safety recommendations.

Please read and save these instructions for future reference!

1 T35+ MACHINE SPECIFICATIONS

Model	T35+
Weight	9.5 kg
Cutter Capacity	35 mm Ø x 150 mm depth of cut
Twist Drill Capacity	13 mm with twist drill and chuck
Motor	1100 W
Height Min/Max	Min 375 / Max 580
Length	275 mm
Width	181 mm
RPM	Loaded 450 rpm
Magnetic Base Dimensions	80 mm x 168 mm
Magnet Deadlift(on 25 mm plate)	1000 kg (10000 N)
Noise Level	Does not exceed 90 dB
Vibration Level	Does not exceed 2.5 m/s^2
Voltage	110 V or 220 V

2 T35+ AT A GLANCE

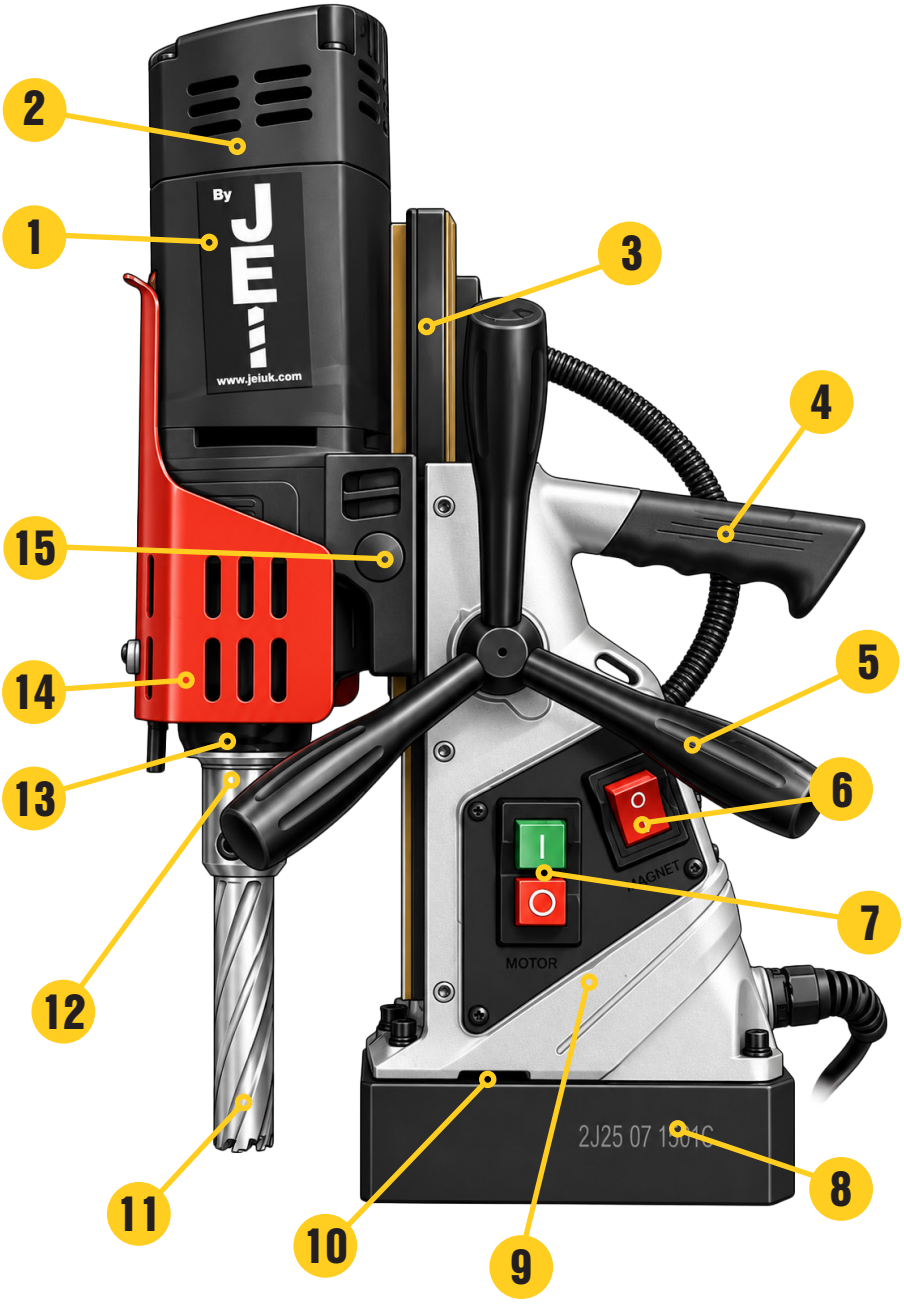

1. MOTOR
2. MOTOR HOUSING
3. SLIDE RAILS
4. CARRY HANDLE
5. FEED HANDLE
6. ON/OFF SWITCH
7. MAGNET SWITCH
8. MAGNETIC BASE
9. MAIN BODY
10. SAFETY ANCHOR POINT
11. JEI CUTTER
12. ARBOR
13. COOLANT RING
14. GUARD
15. MOTOR HEIGHT CLAMP

HINTS AND TIPS

For optimum cutting performance and extended cutter life, use JEI cutting fluid with JEI annular cutters.

JEI ANNULAR CUTTERS



JEI OILS & LUBRICANTS



3 SAFETY PRECAUTIONS



HEARING PROTECTION



EYE PROTECTION



PROTECTIVE GLOVES



SAFETY FOOTWEAR



PROTECTIVE CLOTHING

4 GENERAL SAFETY ADVICE



Use only on flat, clean steel surfaces.

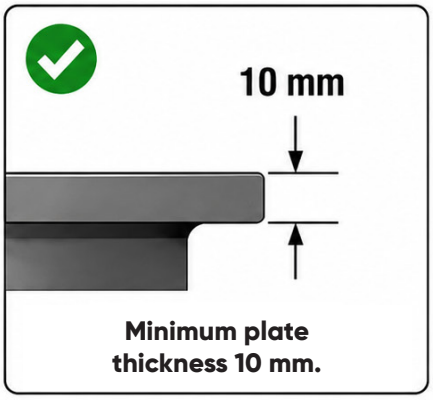

Minimum plate thickness 10 mm.



Always secure the machine with the safety strap.



Keep work area clean and free from debris.

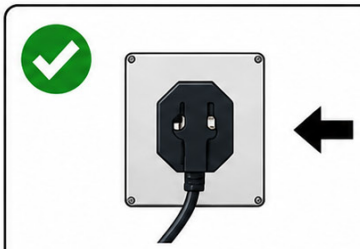

Disconnect power before maintenance or adjustments.



Do not touch the cutter or moving parts.

WARNING! NEVER USE DAMAGED CUTTERS OR OPERATE THIS MACHINE IN WET OR EXPLOSIVE ENVIRONMENTS

ELECTRICAL SAFETY!

Connect the Turbo™ 35+ to a properly grounded power source.
Never remove the earth pin or use a damaged plug or cable.
If in doubt, have the power supply checked by a qualified electrician.

5 WHAT'S INCLUDED

Check all items are included and undamaged.



Turbo™ 35+ Drilling Machine



Coolant Bottle



Safety Strap



Allen Keys

6 PRE-USE CHECKLIST

1	Ensure the work surface is flat, clean, and free from paint, rust, or scale.	
2	Install the cutter and ensure it is fully tightened.	
3	Attach the safety strap to the machine and secure to the workpiece.	
4	Connect the machine to a properly grounded power supply.	
5	Position the machine over the workpiece.	
6	Switch the magnet on. Check for full magnetic adhesion.	

GOOD PRACTICE

- Always maintain a good view of the work area.
- Use only sharp, undamaged cutters designed for magnetic drills.
- Use suitable cutting fluid to extend cutter life and improve performance.
- Never force the cutter. Let the machine do the work.
- Regularly inspect the machine and accessories for wear or damage.

The magnetic base achieves maximum holding force only on clean, flat, steel surfaces with a min. thickness of 10 mm.

ELECTRICAL CONNECTION

Check the supply voltage and frequency match the rating plate (+6% / −10% tolerance). Use only suitably rated extension leads to prevent reduced performance and overheating.

7 READY TO DRILL

1 CHECK THE WORKPIECE

- Steel workpiece only
- Minimum thickness 10 mm
- Flat and stable

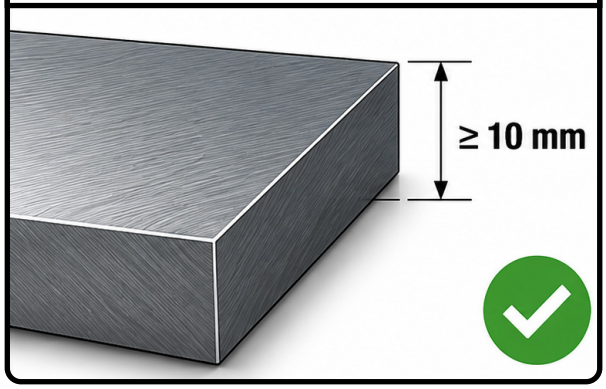

2 CLEAN THE SURFACE

Remove dust, dirt, paint, and debris.



3 FIT THE CUTTER

Insert the annular cutter into the arbor and tighten the set screws. Use JEI annular cutters for clean, accurate holes.

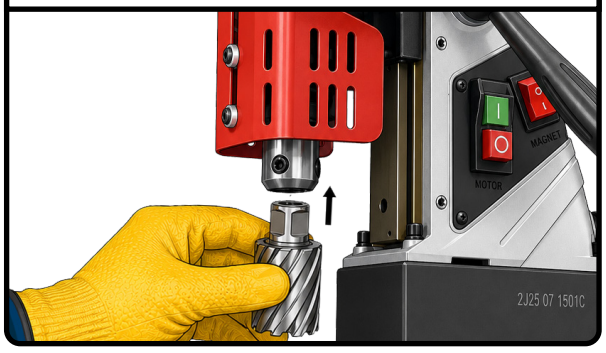

4 ADD COOLANT

Fill the coolant reservoir with a water-soluble coolant/lubricant. For best results use JEI cutting fluid, spray, or paste.



5 LOCATE THE HOLE CENTRE

Use the pilot pin to locate the centre of the hole accurately.

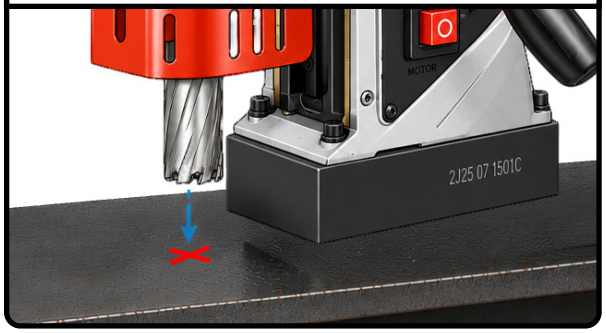

6 ENGAGE THE MAGNET

Turn the rocker switch to the 'ON' position. The indicator will illuminate.

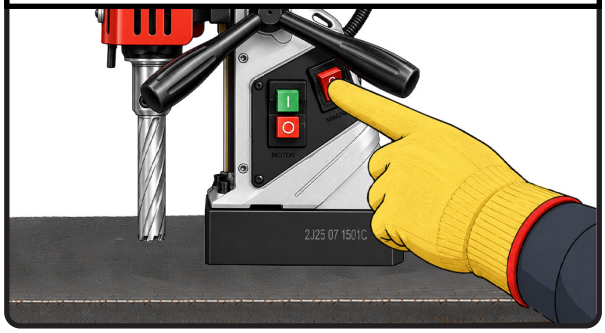

WARNING!
Do not use the drill's lubrication system in vertical drilling applications. Use JEI cutting paste instead.

8 MAKING THE CUT

1 START THE MOTOR

Press the motor switch to the 'ON' position to start the motor.



2 APPLY GENTLE PRESSURE

Apply gentle downward pressure until the cutter establishes an initial groove.

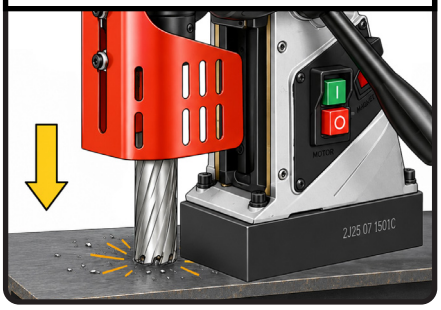

3 COOLANT FLOWS AUTOMATICALLY

Coolant flows through the cutter to lubricate and extend tool life.

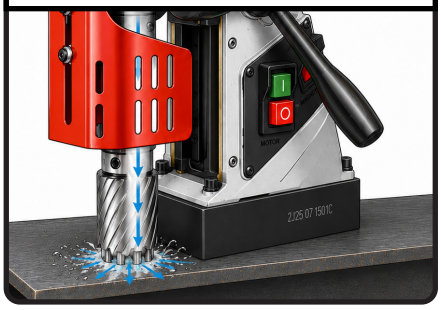

4 CONTINUE WITH STEADY FEED

Maintain steady feed pressure. Do not force the cutter.

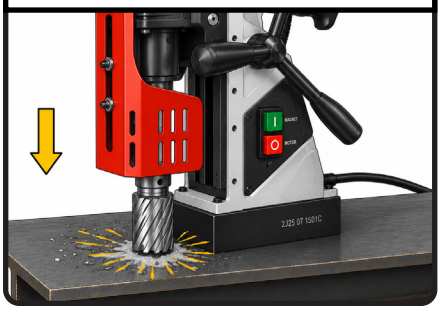

5 SLUG EJECTS AT BREAKTHROUGH

The slug will eject automatically when the cut is complete.



6 RAISE THE CUTTER

Raise the cutter clear of the workpiece before switching the magnet off.



9 CORRECT CUTTER USAGE

STANDARD CUTTER



DON'T

Cut through multiple layers or stacks of material with a standard cutter.

turbo™ MULTI-LAYER CUTTER

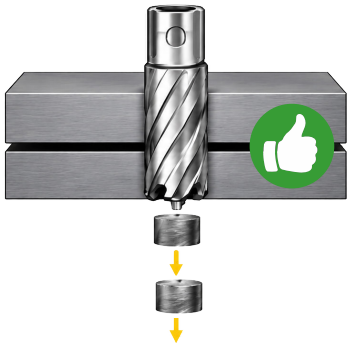

DO

Use JEI's turbo Multi-Layer Cutter designed for cutting multiple layers.

SCAN THE QR CODE BELOW FOR OUR GUIDE TO MULTI-LAYER CUTTING

Standard cutters are designed for single layers only.
For stacked materials use: JEI's Turbo Multi-Layer Cutter.



10 KEEP YOUR T35+ PERFORMING AT ITS BEST

Regular maintenance will ensure the safety, reliability, and long service life of your machine. Use the service interval chart below as a guide to keep your **T35+** in optimum condition.

TASK	DAILY	WEEKLY	MONTHLY
CLEAN SWARF	✓		
LUBRICATE SLIDE		✓	
INSPECT BRUSHES			✓
CHECK MAGNET		✓	
INSPECT CABLE		✓	

11 EC DECLARATION OF CONFORMITY

We **JEI Cutting & Drilling Solutions Ltd**
Unit 21 Empire Business Park, Enterprise Way, Burnley, Lancashire. BB12 6LT, UK

Declare with full responsibility that product:

TURBO 35+

which the declaration applies to is in accordance with the following standard(s) placed below:

- **EN 50144-1**
- **EN 55014**
- **EN ISO 12100-1**
- **EN ISO 12100-2**

and satisfies safety regulations of guidelines:
2004/108/EC, 2006/95/EC, 2006/42/EC

BURNLEY, 04/01/2021

Managing Director

12 WARRANTY

JEI Cutting and Drilling Solutions Ltd warrants the **MINIBEAST** to be free from defects in materials and workmanship under normal use for a period of 12 months from the date of purchase.

This warranty does not cover end mills, cutters, or damage and wear resulting from misuse, accident, tampering, or any other cause unrelated to defects in materials or workmanship.

SCAN THE QR CODE TO REGISTER YOUR WARRANTY:

NEED SPARES PARTS?

SCAN THE QR CODE TO DOWNLOAD THE T35+ PARTS AND WIRING MANUAL: